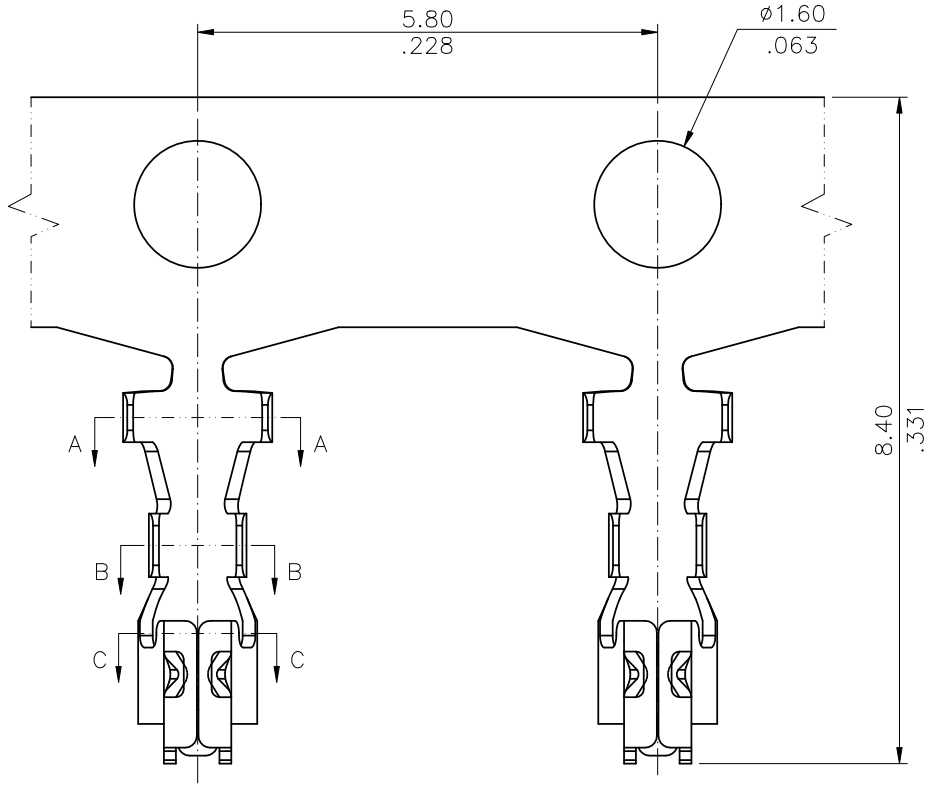

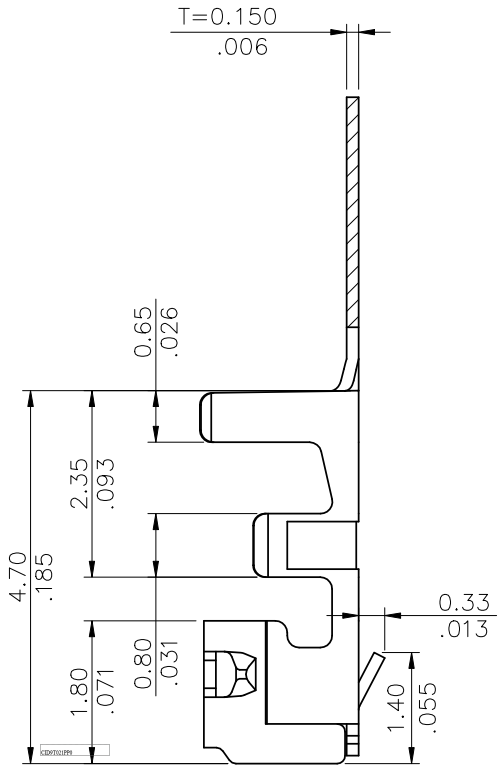

Ordering Code

CID9	T02	1	P	P	0
①	②	③	④	⑤	⑥

① Series No.
② Type: T02= AWG #20~#22
T08= AWG #24~#26
③ Plating: 1= Tin over Nickel
④ Material: P= Phosphor Bronze
⑤ Plating method: P= Post Plating
⑥ Option: 0= Standard

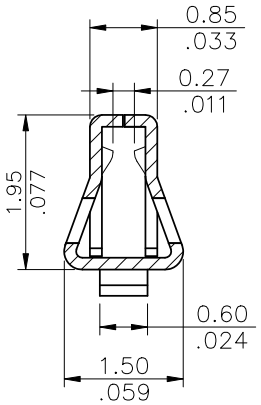

SEC:C–C

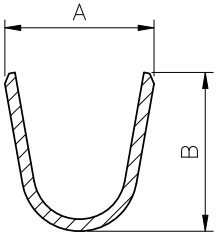

SEC:A–A

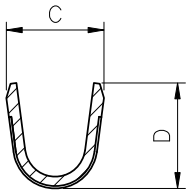

SEC:B–B

Part No.	Wire Gauge	Dimension				Insulation Range
		A	B	C	D	
CID9T021PP0	AWG #20~22	1.88(.074)	2.00(0.79)	1.85(.073)	1.80(.071)	1.45(.057) Max.
CID9T081PP0	AWG #24~26	1.88(.074)	2.00(0.79)	1.23(.048)	1.33(.052)	1.40(.055) Max.

RoHS Compliant

SYM	NAME	DATE	REVISIONS
4			
3			
2			
1			

DRAWN BY:	Karen	11/02-21'
ENGINEER:		
CHECKED BY:		
APPROVED BY:		

UNIT: mm / inch

TOLERANCE UNLESS OTHERWISE SPECIFIED

.X ± 0.30/.012	X.° ±
.XX ± 0.20/.008	.X° ±
.XXX ± 0.10/.004	.XX° ±

TITLE: FOR CID9 SERIES CRIMP TERMINAL

MATERIAL:

FINISH:

瀚荃股份有限公司
CviLux Corporation

DRAWING NO.	CID902S1	PART NO.	CID9T0*1PP0
SCALE	10 / 1	SHEET 1 OF 1	