Feb.1.2020 Copyright 2020 HIROSE ELECTRIC CO., LTD. All Rights Reserved.
In case of consideration for using Automotive equipment / device which demand high reliability, kindly contact our sales window correspondents.

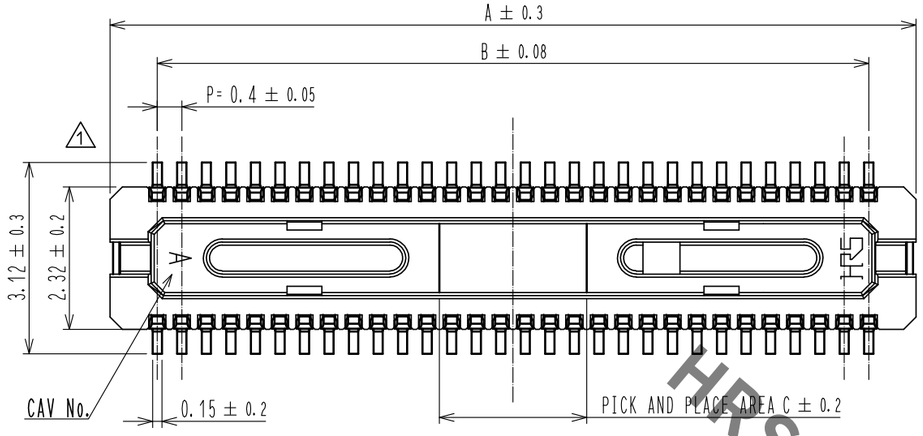

RECOMMMENDED PATTERN

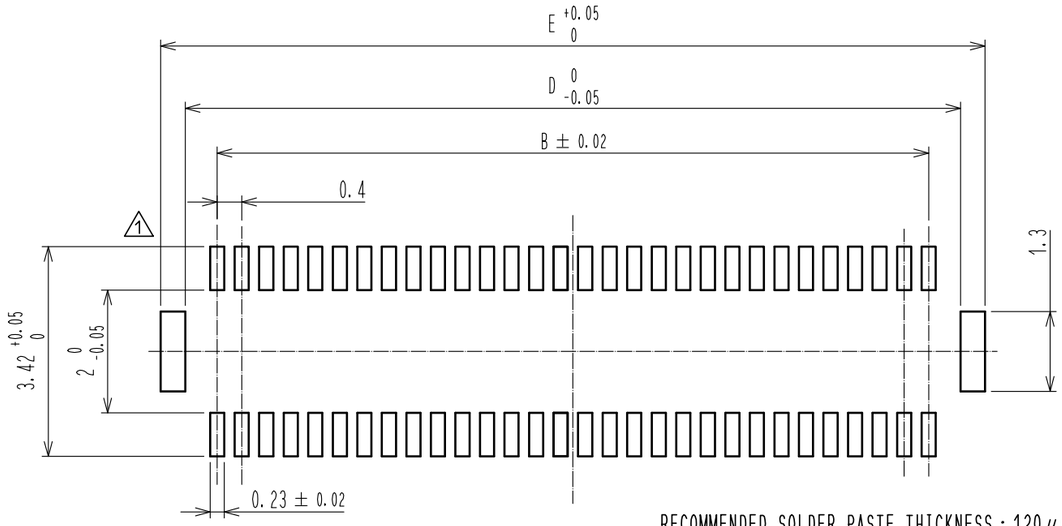

RECOMMENDED SOLDER PASTE THICKNESS : 120μm

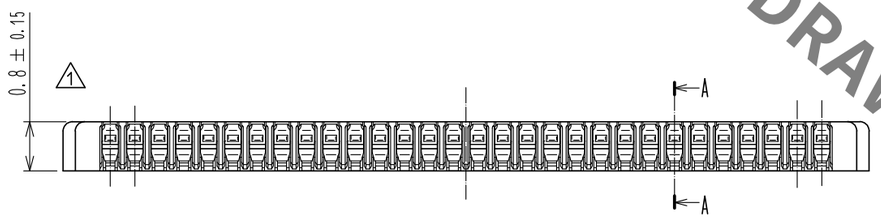

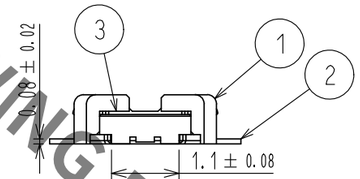

RECOMMENDED METAL MASK OPENING DIMENSIONS FOR LEAD PAD (20:1)

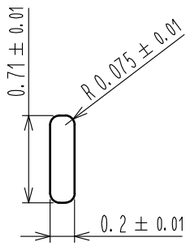

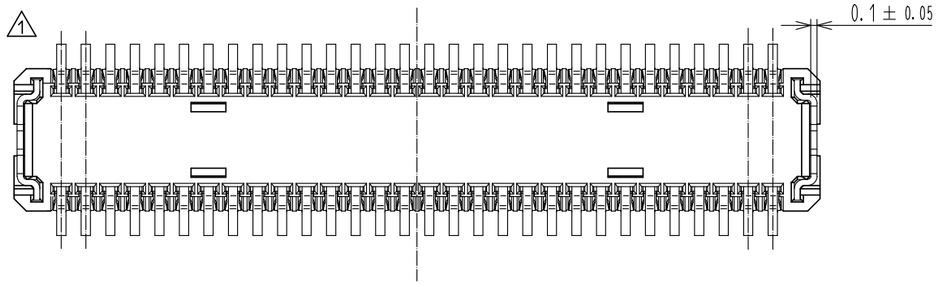

A-A(20:1)

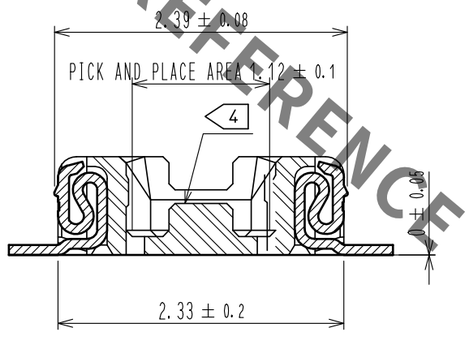

ENGAGEMENT FIGURE(20:1)

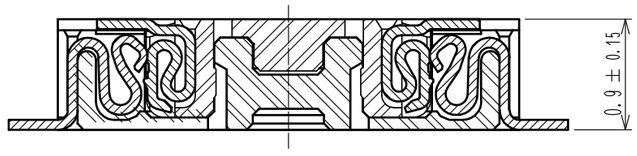

NOTE 1. ALL LEADS CO-PLANARITY SHALL BE 0.1 MAX.
2. PER REEL : 5000 CONNECTORS.
3. AT THE BEGINNING OF THE REEL, 100 mm AT MIN SHALL BE EMPTY POCKETS.
AT THE END OF THE REEL, 160 mm AT MIN SHALL BE EMPTY POCKETS
4 NO CAVITY ON THE CONNECTORS LESS THAN 24 POS.
5 CONTACT PLATING SPECIFICATIONS.
CONTACT AREA : GOLD 0.05μm MIN.
SMT READ : GOLD 0.02μm MIN.
UNDERPLATING : NICKEL 1μm MIN.
(SURFACE : SEALING)

1

PART NO.	CODE NO.	A	B	C	D	E
DF30RB-80DP-0.4V(81)	—	17.14	15.6	3.2	16.64	17.44
DF30RB-70DP-0.4V(81)	—	15.14	15.6	3.2	16.64	17.44
DF30RB-60DP-0.4V(81)	CL684-1287-6-81	17.14	15.6	3.2	16.64	17.44
DF30RB-50DP-0.4V(81)	CL684-1286-3-81	17.14	15.6	3.2	16.64	17.44
DF30RB-44DP-0.4V(81)	CL684-1285-0-81	17.14	15.6	3.2	16.64	17.44
DF30RB-40DP-0.4V(81)	CL684-1284-8-81	17.14	15.6	3.2	16.64	17.44
DF30RB-34DP-0.4V(81)	CL684-1283-5-81	17.14	15.6	3.2	16.64	17.44
DF30RB-30DP-0.4V(81)	CL684-1282-2-81	17.14	15.6	3.2	16.64	17.44
DF30RB-24DP-0.4V(81)	CL684-1281-0-81	17.14	15.6	3.2	16.64	17.44
DF30RB-22DP-0.4V(81)	CL684-1280-7-81	17.14	15.6	3.2	16.64	17.44
DF30RB-20DP-0.4V(81)	CL684-1279-8-81	17.14	15.6	3.2	16.64	17.44

NO.	MATERIAL	FINISH , REMARKS	NO.	MATERIAL	FINISH , REMARKS
			5	PS	OLASTIC REEL(BLACK)
2	PHOSPHOR BRONZE	5	4	POLYSTER	CLEAR(COVER TAPE)
1	LCP	UL94V-0, BLACK	3	PS	CLEAR(EMBOSSED CARRIER TAPE)

UNITS	SCALE	COUNT	DESCRIPTION OF REVISIONS	DESIGNED	CHECKED	DATE
mm	? : 1	1 8	DIS-H-00002752	SH. HOSODA	TS. MIYAZAKI	17.10.10

HIROSE ELECTRIC CO., LTD.

APPROVED	KH. IKEDA	06.08.05	DRAWING NO.	EDC3-312967-01
CHECKED	TS. MIYAZAKI	06.08.05	PART NO.	DF30RB-*DP-0.4V(81)
DESIGNED	TH. ARAI	06.08.04	CODE NO.	CL684-****-*-81
DRAWN	NM. SATO	06.08.04		1/2

HRS DRAWING FOR REFERENCE

Feb.1.2020 Copyright 2020 HIROSE ELECTRIC CO., LTD. All Rights Reserved.
In case of consideration for using Automotive equipment / device which demand high reliability, kindly contact our sales window correspondents.

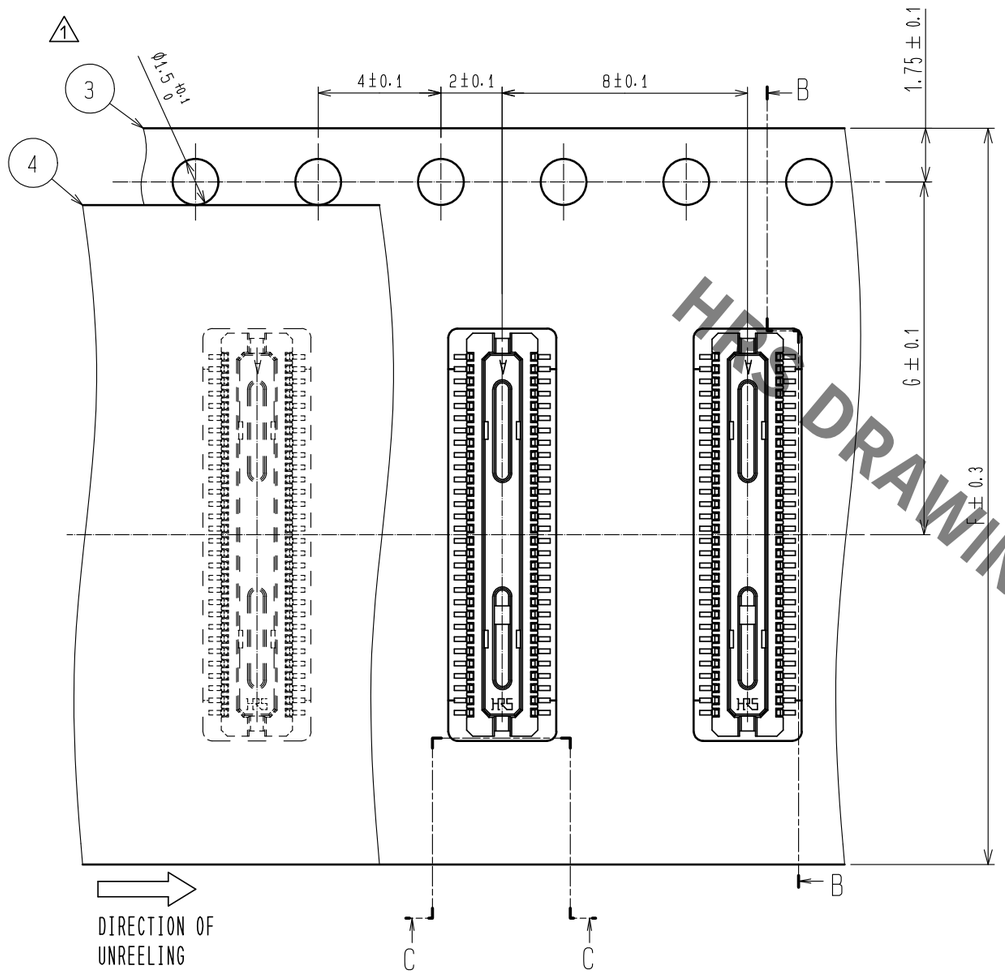

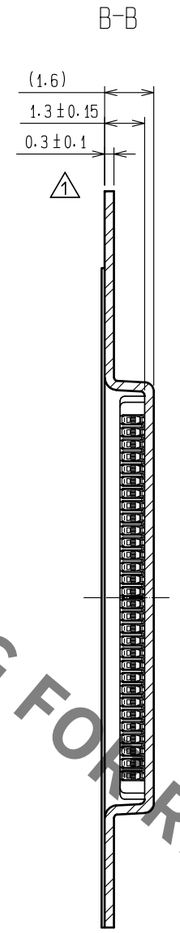

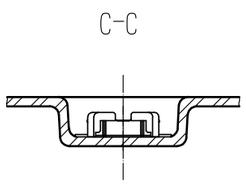

STYKE AND DIMENSION OF REEL(FREE SIZE)

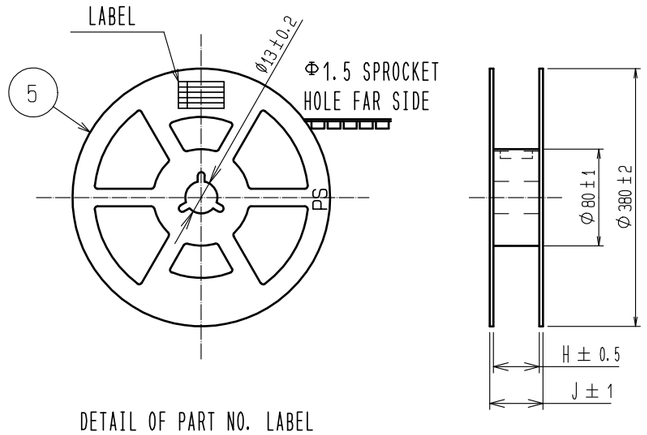

DETAIL OF PART NO. LABEL

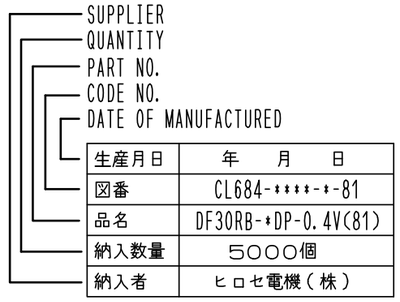

生産月日	年　月　日
図番	CL684-＊＊＊＊-＊-81
品名	DF30RB-＊DP-0.4V(81)
納入数量	5000個
納入者	ヒロセ電機（株）

PART NO.	CODE NO.	F	G	H	J
DF30RB-80DP-0.4V(81)	—	24	11.5	25.5	29.5
DF30RB-70DP-0.4V(81)	—	24	11.5	25.5	29.5
DF30RB-60DP-0.4V(81)	CL684-1287-6-81	24	11.5	25.5	29.5
DF30RB-50DP-0.4V(81)	CL684-1286-3-81	24	11.5	25.5	29.5
DF30RB-44DP-0.4V(81)	CL684-1285-0-81	24	11.5	25.5	29.5
DF30RB-40DP-0.4V(81)	CL684-1284-8-81	16	7.5	17.5	21.5
DF30RB-34DP-0.4V(81)	CL684-1283-5-81	16	7.5	17.5	21.5
DF30RB-30DP-0.4V(81)	CL684-1282-2-81	16	7.5	17.5	21.5
DF30RB-24DP-0.4V(81)	CL684-1281-0-81	16	7.5	17.5	21.5
DF30RB-22DP-0.4V(81)	CL684-1280-7-81	16	7.5	17.5	21.5
DF30RB-20DP-0.4V(81)	CL684-1279-8-81	16	7.5	17.5	21.5

HRS DRAWING FOR REFERENCE

DRAWING NO.	EDC3-312967-01
PART NO.	DF30RB-＊DP-0.4V(81)
CODE NO.	CL684-＊＊＊＊-＊-81

1 2/2