Feb.1.2020 Copyright 2020 HIROSE ELECTRIC CO., LTD. All Rights Reserved.
In case of consideration for using Automotive equipment / device which demand high reliability, kindly contact our sales window correspondents.

	COUNT	DESCRIPTION OF REVISIONS	BY	CHKD	DATE		COUNT	DESCRIPTION OF REVISIONS	BY	CHKD	DATE
△					. .	△					. .
△					. .	△					. .
△					. .	△					. .

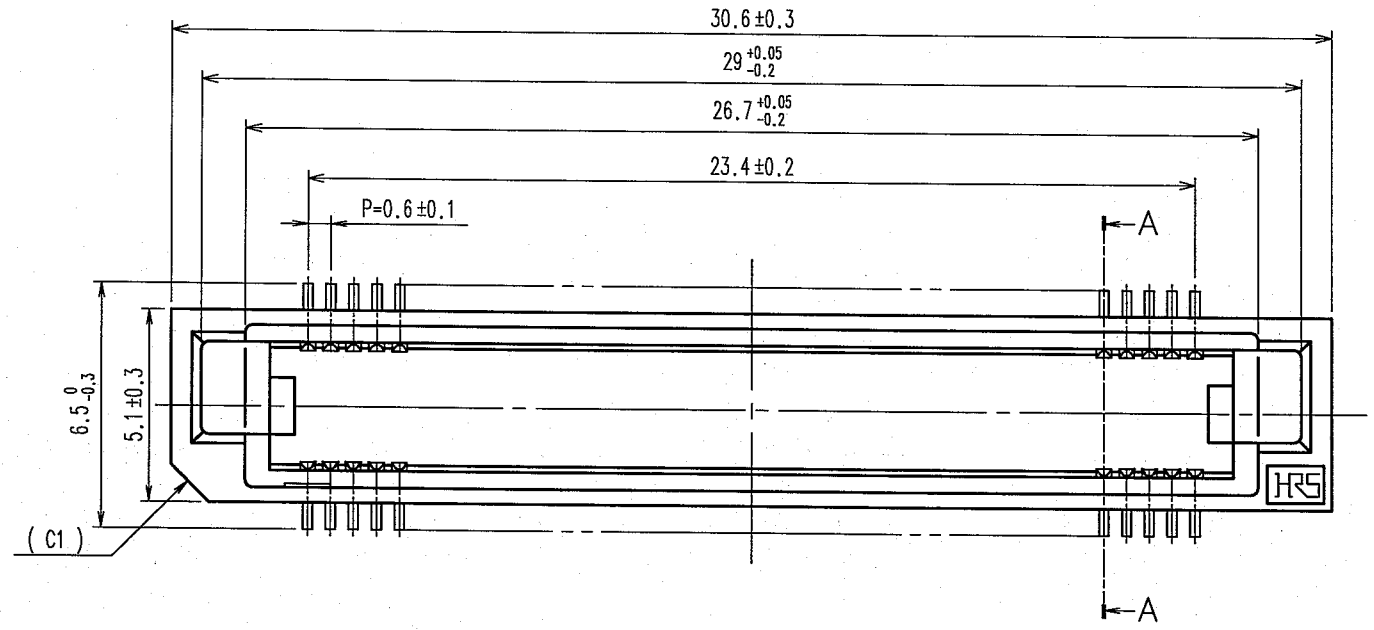

RECOMMENDED LAND PATTERN DIMENSION OF PCB (MOUNTING SIDE) (2:1)

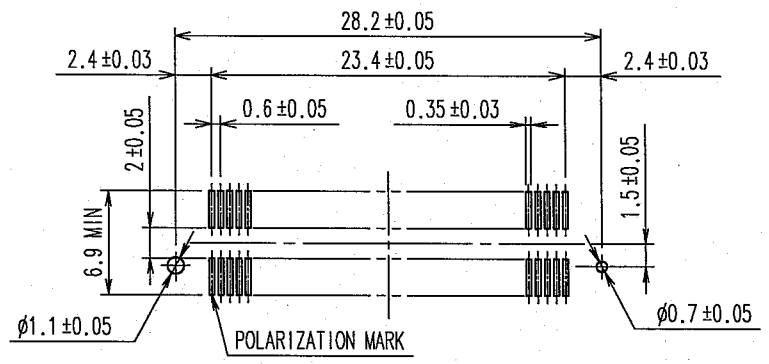

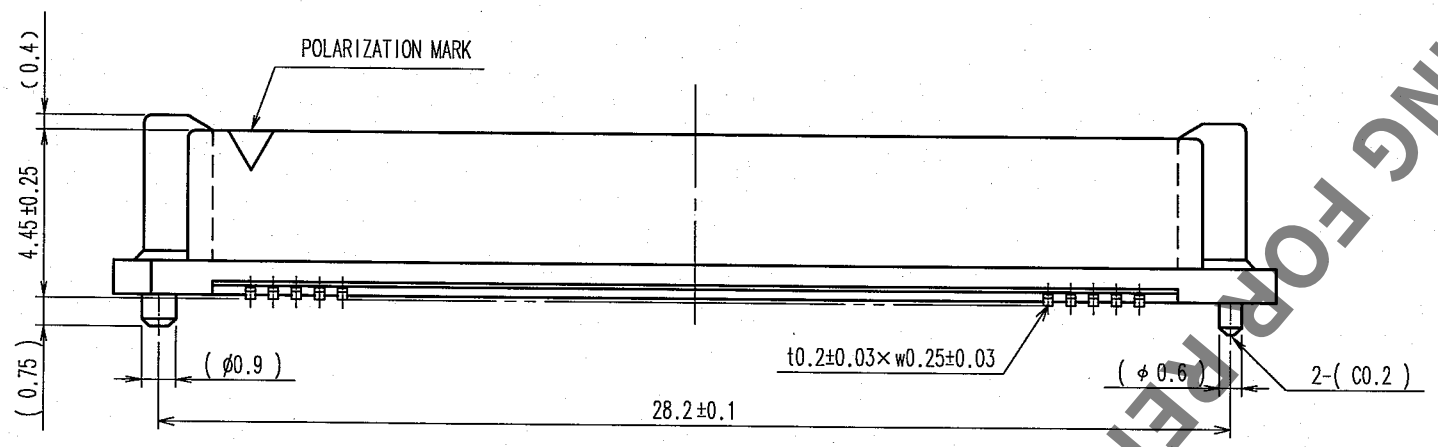

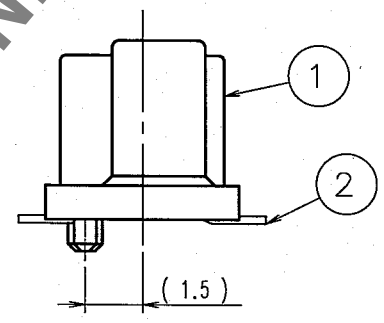

A–A

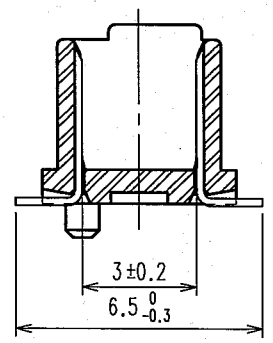

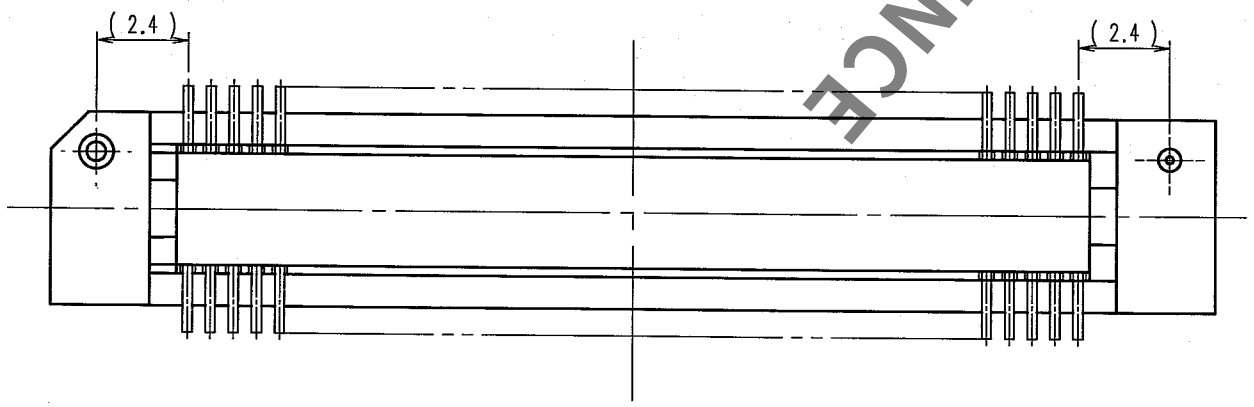

NOTE 1. LEAD CO-PLANARITY SHALL BE 0.1mm MAX.
2. TUBE PACKAGING SHALL BE APPLIED FOR THIS PRODUCT.
SEE NEXT PAGE FOR DETAILS.
3. FOR MODIFICATION,ETC.,PREVENTIVE HOLE FOR SINK MARK MAY BE ADDED ACCORDING TO CIRCUMSTANCES.
4. THE DIMENSIONS IN PARENTHESES ARE FOR REFERENCE.

NO.	MATERIAL	FINISH, REMARKS	NO.	MATERIAL	FINISH, REMARKS
1	POLYPHENYLENE SULFIDE	LIGHT BROWN (UL94V-0)	2	PHOSPHOR BRONZE	CONTACT AREA:GOLD 0.1μm min. LEAD AREA:GOLD FLASH UNDER PLATING:NICKEL 0.5μm min.

CODE NO.(OLD)	DRAWN	DESIGNED	CHECKED	APPROVED	RELEASED
CL	K.Doi '05·09·02	K.Doi '05·09·02	K.Ozawa '05·09·02	H.Okawa 05.09.02	. .

SCALE 5 : 1	DRAWING NO. EDC3-150822-21	PART NO. FX8C-80P-SV(91)
UNITS mm	HRS HIROSE ELECTRIC CO., LTD	CODE NO. CL578-0503-4-91 1/2

TO
PCK

HRS DRAWING FOR REFERENCE

Feb.1.2020 Copyright 2020 HIROSE ELECTRIC CO., LTD. All Rights Reserved.
In case of consideration for using Automotive equipment / device which demand high reliability, kindly contact our sales window correspondents.

	COUNT	DESCRIPTION OF REVISIONS	BY	CHKD	DATE		COUNT	DESCRIPTION OF REVISIONS	BY	CHKD	DATE
△					. .	△					. .
△					. .	△					. .
△					. .	△					. .

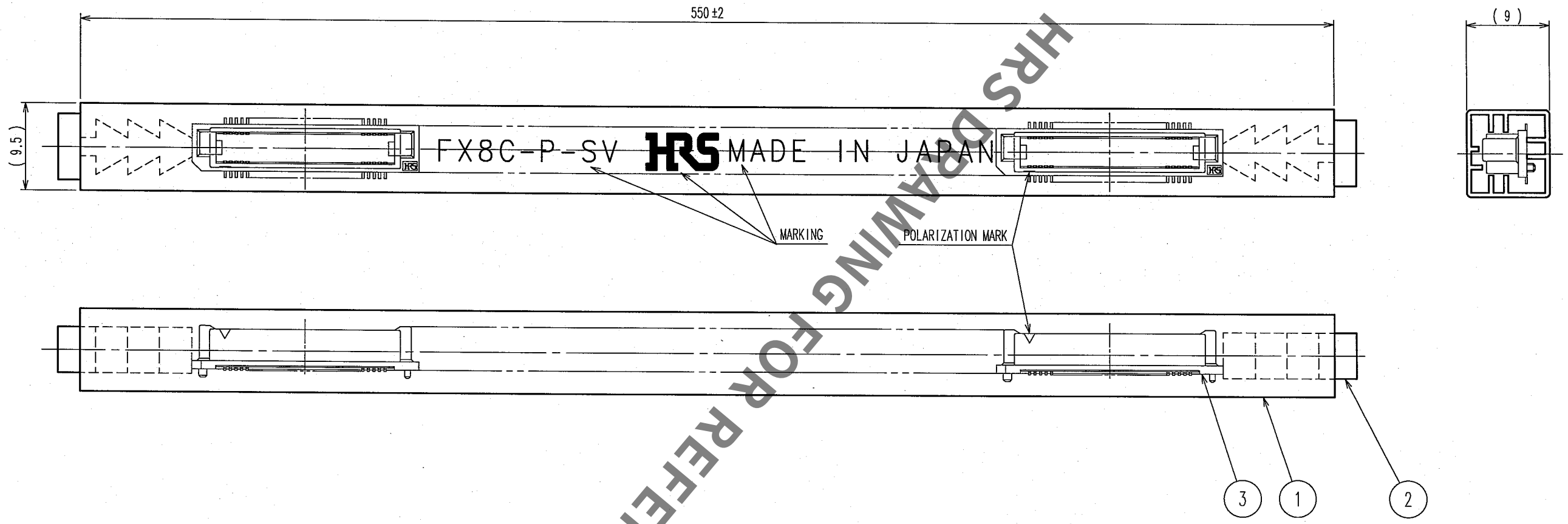

HRS DRAWING FOR REFERENCE

NOTE 1. 1 TUBE : 17 CONNECTORS.
2. THE DIMENSIONS IN PARENTHESES ARE FOR REFERENCE.

NO.	MATERIAL	FINISH, REMARKS
2	POLYVINYL CHLORIDE	STOPPER
3	(CONNECTOR)	
1	POLYVINYL CHLORIDE	TUBE

CODE NO.(OLD)	DRAWN	DESIGNED	CHECKED	APPROVED	RELEASED
CL	K. Doi '05.09.02	K. Doi 05.09.02	K. Ozawa '05.09.02	H. Okawa 05.09.02	. .

SCALE FREE	DRAWING NO. EDC3-150822-21	PART NO. FX8C-80P-SV(91)
UNITS mm	HRS HIROSE ELECTRIC CO., LTD	CODE NO. CL578-0503-4-91

2/

TO
PCK