R19 Series Rocker Switches / ILLUMINATED

R19 : 6A 250V AC.
12A 125V AC.
16A 250V AC.
21A 125V AC.
SS21: 12A 125/250V AC. (CSA)
10A 125/250V AC. (UL)
12(4)A 250V~T85. (VDE, ENEC10)

SPECIFICATION:

Rating: 6A 250V AC (Standard), 12A 250V AC.
Contacts gap: >3mm.
Contact resistance: <20mΩ. (initial)
Insulation resistance: >1,000MΩ.
Withstand voltage: > 1,500V DC for 1 minute.
Mechanical life: > 30,000 Cycles.
Electrical life: > 10,000 Cycles.

R19 SEAL CAP

R19-20RL
SS21BBDRL

R19-20I
Illuminated

R19-20
SS21BBBT

MATERIALS:

Body: Nylon 66.
Rocker: PC or Nylon 66.
Contact surface: Alloy contact point
, Silver plated.
Illuminated rockers: 125V/250V Neon Lamp,
24V 12V 9V 6V Bulb.
Terminal: Brass, Silver plated.

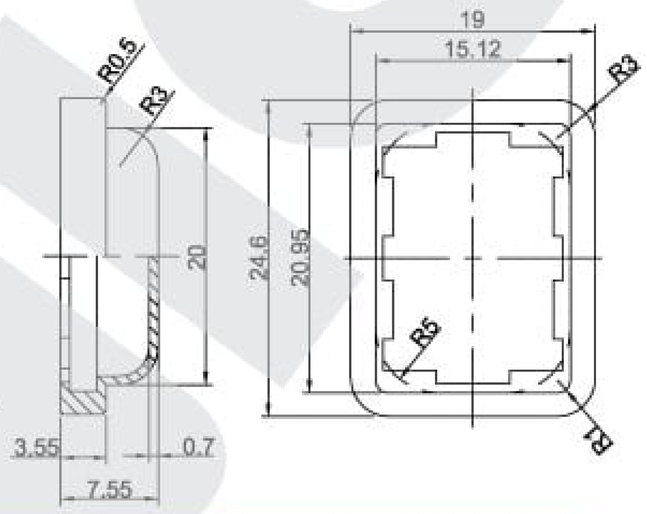

MOUNTING HOLE

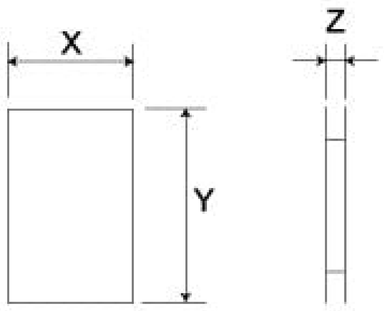

Z	X	Y
0.70 ~ 1.25	12.9 ~ 13.1	19.2 ~ 19.3
1.25 ~ 2.00	12.9 ~ 13.1	19.3 ~ 19.4
2.00 ~ 3.00	12.9 ~ 13.1	19.5 ~ 19.6

SCHEMATIC

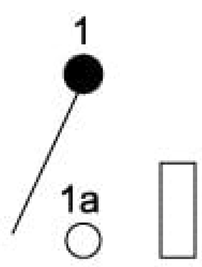

SPST

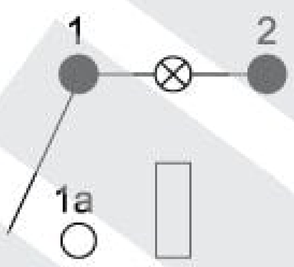

SPST
W/LAMP

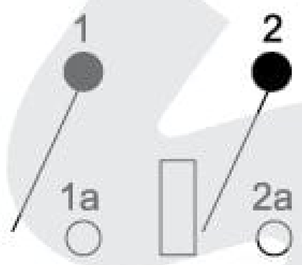

DPST

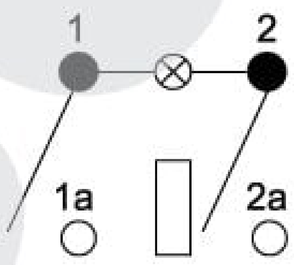

DPST
W/LAMP

R19-20BBBT (6A 250V /12A 125V AC DPST)
R19-20IBRBT2 (W / RED LAMP, 6A 250V /12A 125V AC, DPST)
SS21BBBT (12A 250V AC, DPST)

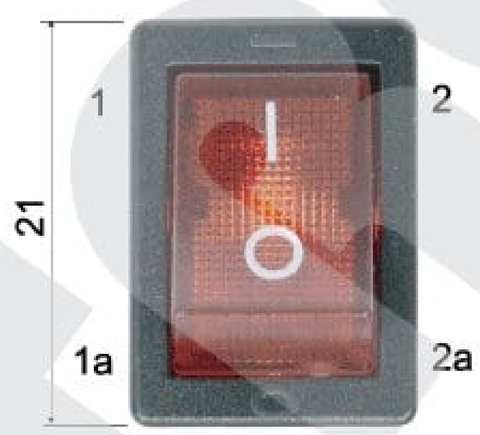

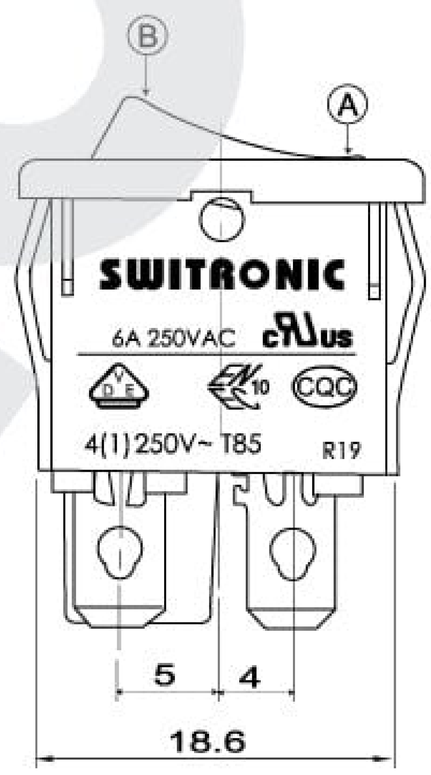

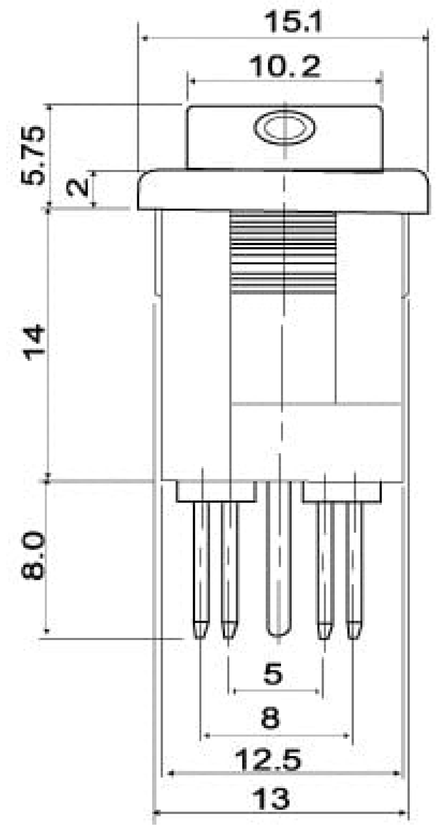
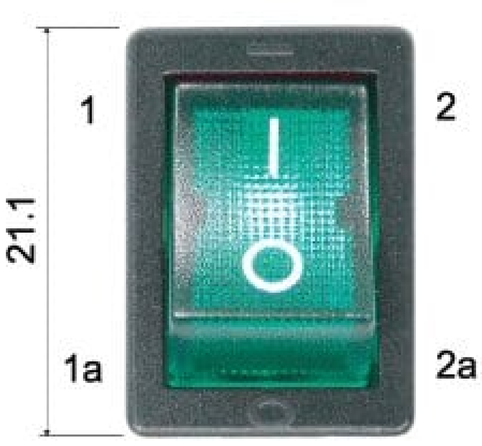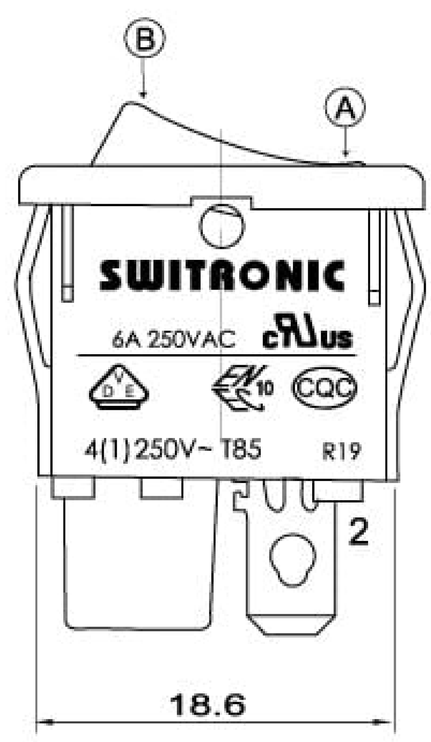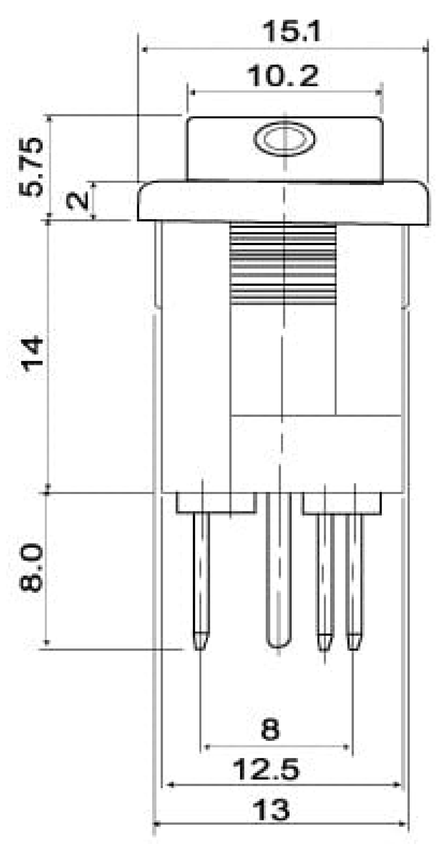
R19-00IBGBT2 (6A 250V / 12A 125V AC, W / GREEN LAMP, SPST)
SS21BBBTS (12A 250V AC, SPST)