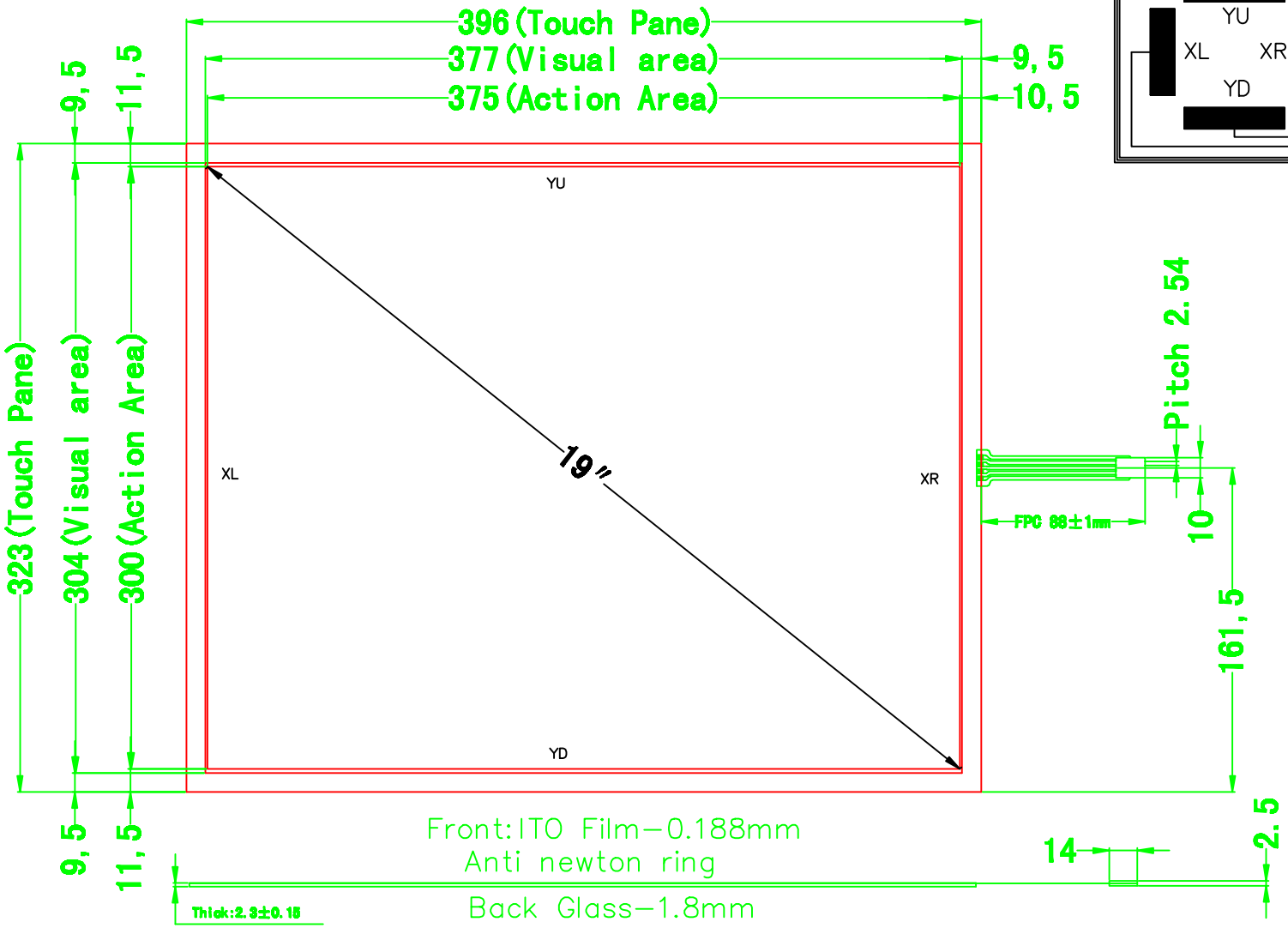

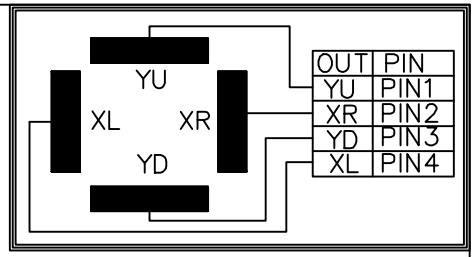

Instruction:
1.Type: Film to Glass
2.Operating Voltage: ≤10V
3.Response Time: ≤10ms
4.Storage Temperature: −20℃~+70℃
5.Operation Temperature/Humidity : −10℃~+60℃/ 20%~95%
6.Hitting Life: >1,000,000 Times ,250gf Force;
7.writting Life>100,000 Times 250gf Force;
8.Connect Material: FPC+PIN
9.Film Thickness: 0.188mm
10.Glass Thickness: 1.8mm
11.Light transmission: ≥78%
12.Force: 100g or more
13.Linearity: ≤1.5%
14.Insulation: ≥20MΩ
15.Resistance: X: 400Ω~700Ω;
Y: 235Ω~400Ω.
16.Surface Hardness≥3H(pencil)

Touch-Pane-VTW4190A1

REVISIONS

SCALE	1:1	MATERIAL	F/G	Version	1.0
UNIT	mm	TOLERANCE	±0.3m	NO.:	1 of 1
DESIGN	Lucy	DATE	20090605		
CHECK	Peter • Li	DATE	20090605		
RELEASE	Victor	DATE	20090605		