Ver.	Modify No.	Details	Area	P.I.C	Date

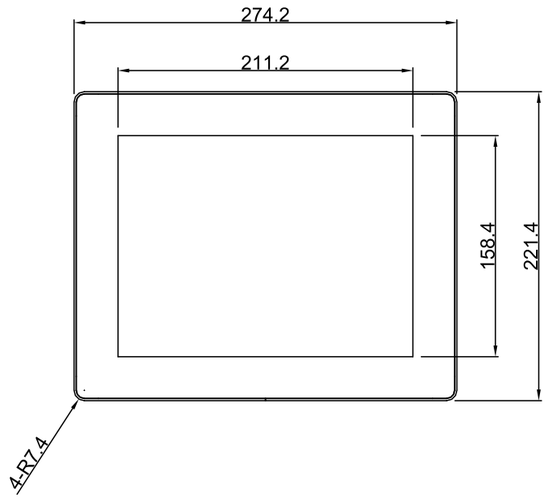

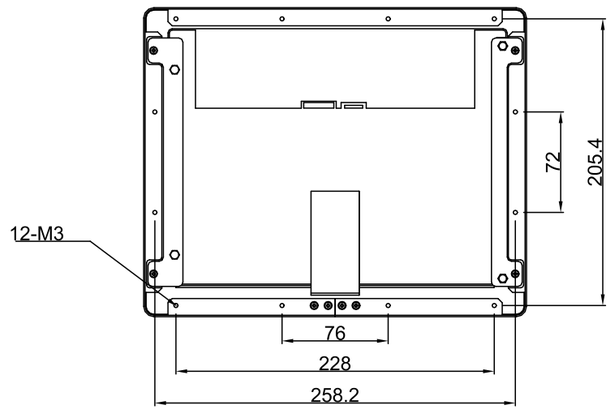

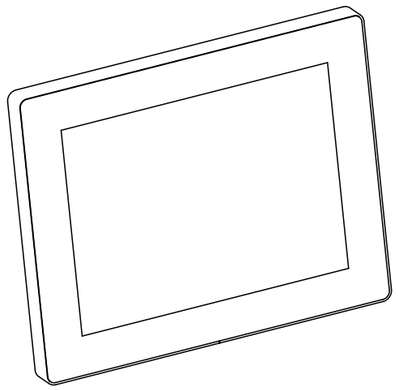

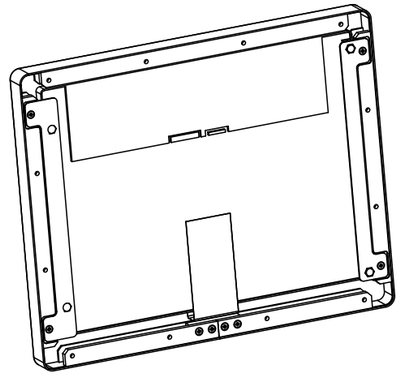

Technical Datasheet：
1. Structure: TP+LCM Frame Bonding
2. Cover Glass: Tempered glass
3. LCD: G104AGE-L02
4. TP Controller：BTP-TPM-CTR-ILI-104B
5. TP Controller IC: ILI2511
6. Surface Hardness: ≥6H
7. Light Transmittance: ≥85%
8. Unmarked Tolerance: ±0.5mm
9. All materials used conform to RoHS standards

Part No.	BTP-TMS-10.4-G1-R05					
Product Name： 10.4 inch Touch Display (TP+LCM Frame bonding)			Drawing No.	MS104220407R05		
			Project Code.	MS104R05		
Designed by:	Curry. Wang	Business Unit： SNT-BTP	Period Mark		View Angle	Ratio
Checked by:	Betty.Fu		A			1:1
Approved by:	Cale.Chen					
Workmanship:		BOM Code 2.22.104.01.0105	Page 1		Total 1 Page	
Standardization:	Link.Chen	Product Series BTP-TPA	思诺泰科创电子（苏州）有限公司 SINOTECTRONICS INC.			
Released by:	Rocky.Liu					

E-File Name: MS104220407R05

A3