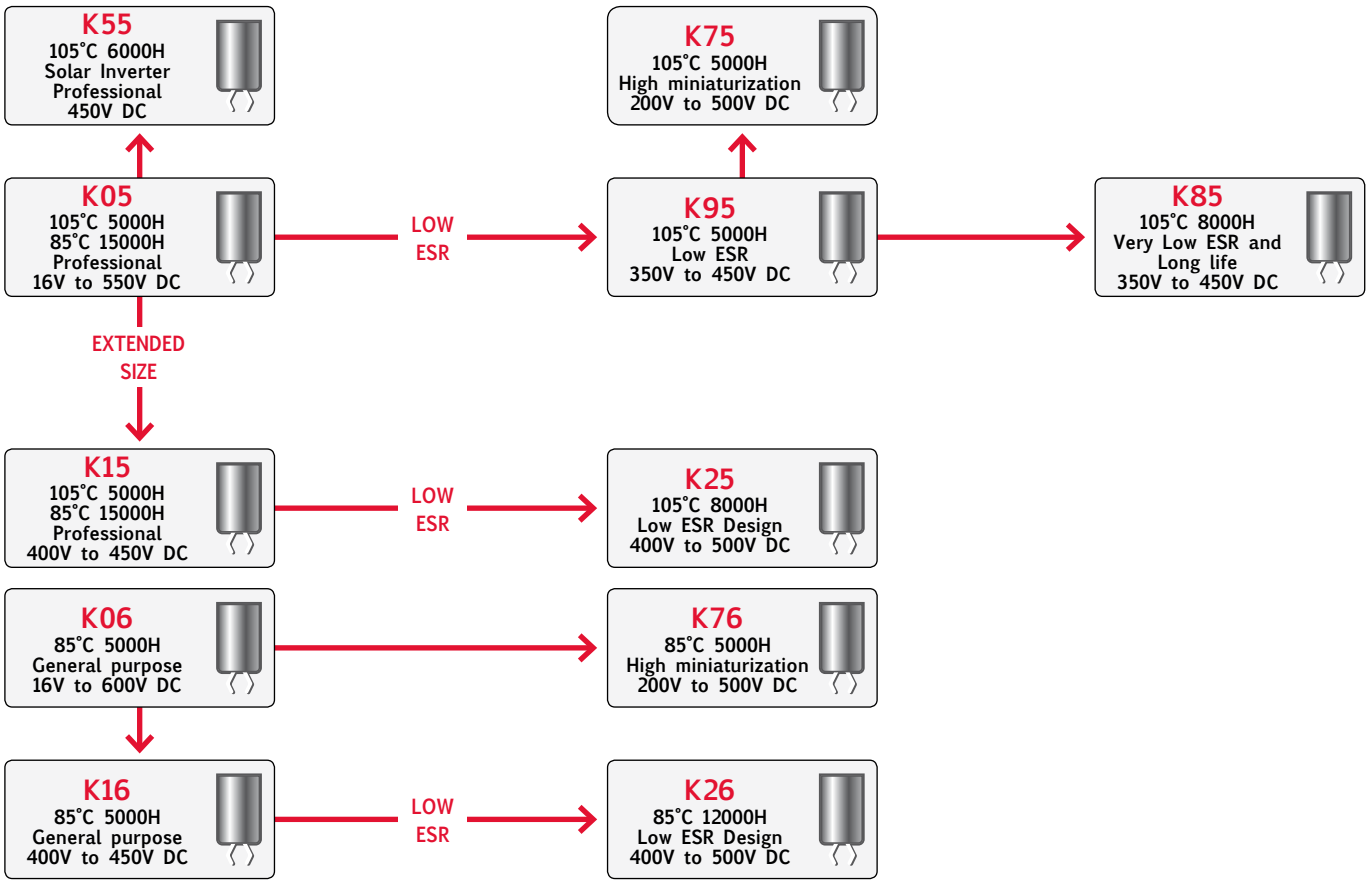PRODUCT ROAD MAP
FOR SNAP-IN TYPE CAPACITORS